ALL DIMENSIONS ARE IN MILLIMETRES

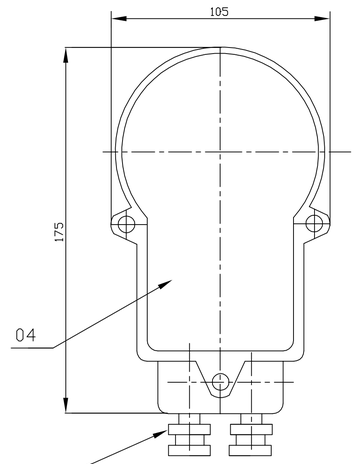

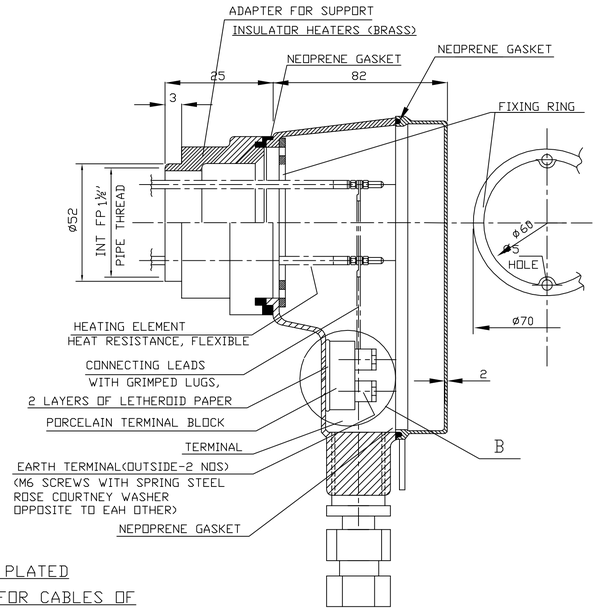

2 NOS DOUBLE COPMRESSION NICKEL CHROMIUM PLATED BRASS(HEAVY DUTY) CABLE GLANDS SUITABLE FOR CABLES OF 2 CORE 2.5 SQ MM COPPER CONDUCTOR UN ARMOURED PVC CABLE

DETAIL-B

(ON TERMINAL BLOCK)

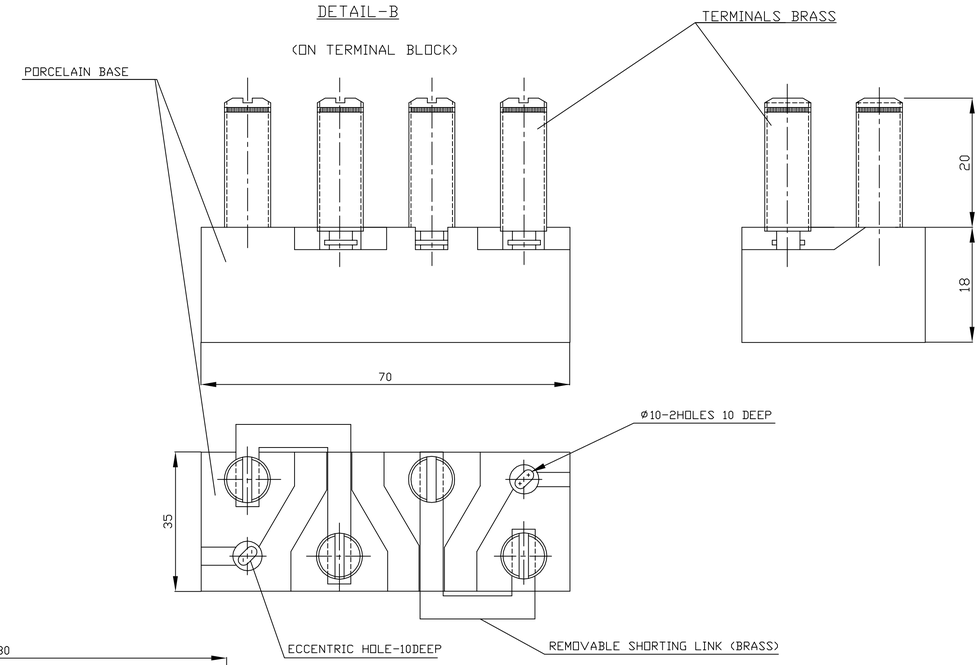

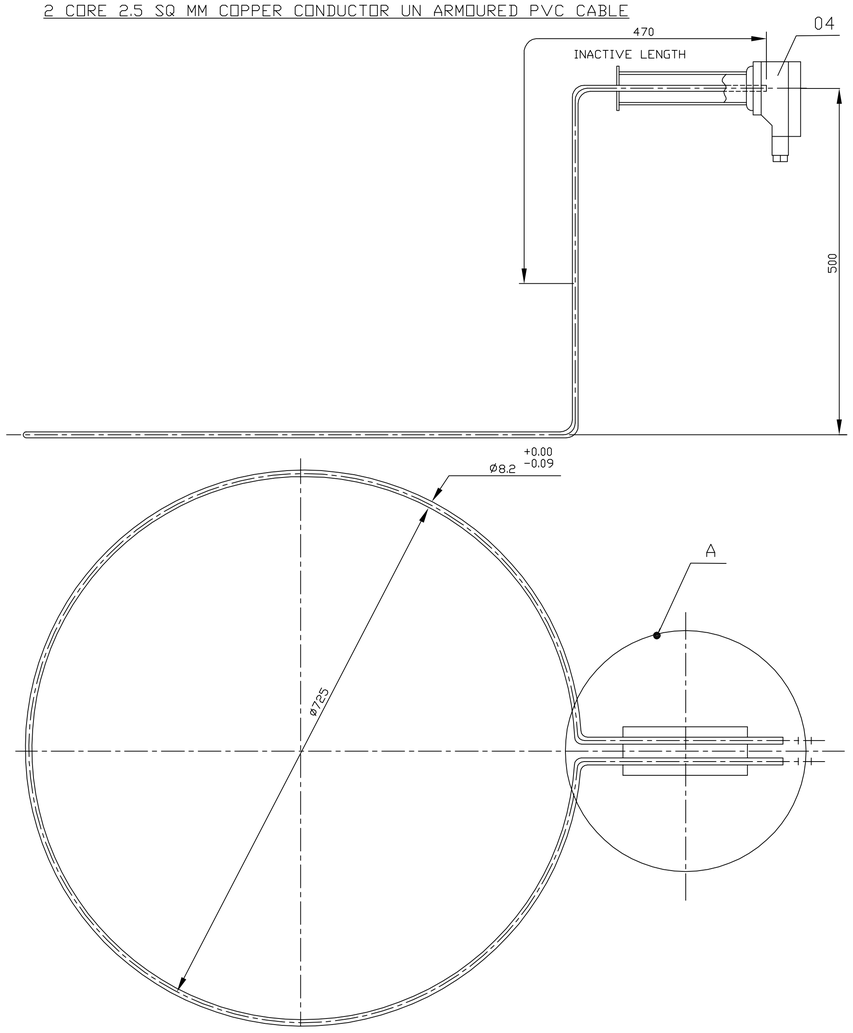

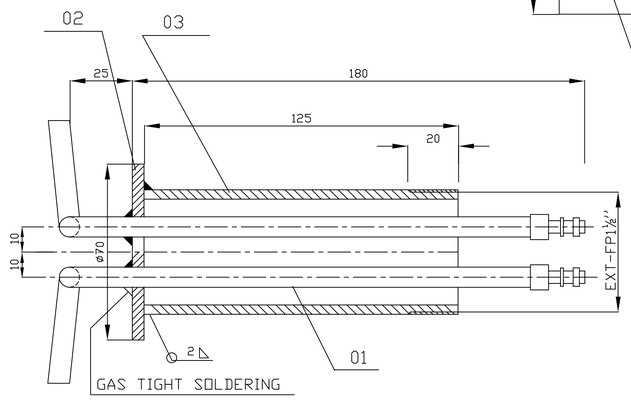

DETAIL – A

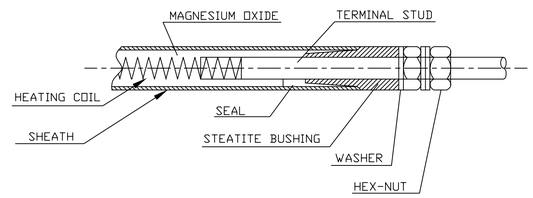

CROSS SECTION OF HEATING ELEMENT

NOTE :–

1. SHEATH MATERIAL : STAINLESS STEEL SS321. 01
2. HEATING COIL MATERIAL KANTHAL D WIRE.
3. PIPE THREADS SHALL BE AS PER IS 2643.
4. ALL FERROUS PARTS TO BE GALVANISHED AND BRASS PARTS TO BE NICKEL PLATED.
5. TERMINAL BOX MATERIAL: CAST ALUMINIUM ALLOY–PRESSURE DIE CAST.
6. MINIMUM CLEARANCE FORM THE TERMINAL STUD TOP AND HEATING ELEMENT STUD TO THE TERMINAL END LID SHOULD BE 19 MM.OTHER CLEARANCES CREEPAGES SHALL BE AS PER THE RELEVANT STANDARDS.
7. 02 THE TERMINAL BOX SHALL BE DESIGNED FOR IP55 DEGREE OF PROTECTION AS PER IS/IEC–60947.
8. CRIMPING TYPE CABLE LUGS (ATC)SHALL BE PROVIDED TO RECEIVE 2 RUNS OF 2C–2.5 SQ MM CU CABLE.
9. MANUFACTURING DRAWINGS SHALL BE SUBMITTED FOR APPROVAL.
10. CABLE GLANDS SHALL BE FITTED WITH DUMMY PLUGS.
11. NON ASBESTOS THERMAL & ELETRICAL INSULATING CUSHION MATERIAL SUITABLE FOR THE TEMPERATURE EXPERIENCED SHALL BE PROVIDED BELOW THE PROCELAIN TERMINAL BLOCK.
12. 02 PAINT SHADE FOR TERMINAL BOX SHALL BE: RAL-5012 (BLUE).

VARIANT NO.	ITEM NO.	DESCRIPTION	STD	DRAWING NO.	ITEM No. / VAR No.	MATL CODE / MATL SPEC	A / C	UNIT / DI	UNIT WT. / QUANTITY	GS	ZONE
	04	TERMINAL BOX				PRESSURE DIE			0.40		
						CAST ALUMINIUM			1		
	03	TUBEø48.3/3.25 L–125							0.3		
						IS 1239			1		
	02	SHEET 2X70X70							0.08		
						IS 1079–ST 34			1		
	01	HEATING ELEMENT–1 PHASE 415V; AC; 1KW; 50HZ							1.0		
									1		

REV	DATE	ALTERED		
02	28.01.14	CHECKED	G.M.K	
			M.J.M	
	NOTE NO : 12 ADDED.			
REV	DATE	ALTERED	R.V	
01	14.08.10	CHECKED	S.R	
	SHEATH MATERIAL REVISED FROM INCOLLY TO STAINLESS STEEL IN NOTE NO. 1			

CAUTION: The information on this document is the property of BHARAT HEAVY ELECTRICALS LTD. It must not be used directly or indirectly in any way detrimental to the interest of the company.

PROJECT

NATIONAL THERMAL POWER CORPORATION LTD.

BHARAT HEAVY ELECTRICALS LTD.,
UNIT: BOILER AUXILIARIES PLANT.
RANIPET – 632 406.

	NAME	SIGN	DATE	NO.OF VAR.
DRN	L.DEEPA	–SD–	01.04.04	
CHD	D.S	–SD–	01.04.04	
APPD	C.R.J	–SD–	02.04.04	

DEPT	GRADE OF UNTOL.DIM		SCALE	WEIGHT (KG).	REF. TO ASSY/OLD DRG.	ITEM NO.	NO. OF ITEMS
AQCS			N T S	——	——	–	
CODE 862	C / M / F						

TITLE	CARD CODE	DRAWING NO.	REV
HEATING ELEMENT FOR INSULATOR HOUSING(CYLINDRICAL) 1KW, 415V AC	U 01	1–00–114–27794	02

Size A1